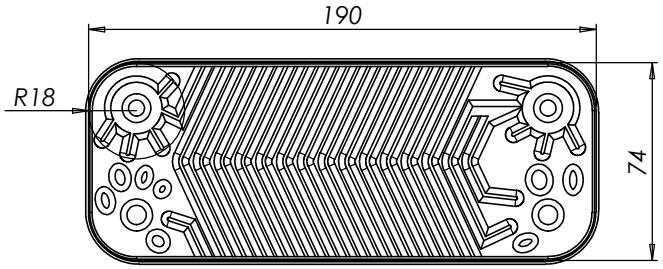

G20 Engineering
PEP15440C01

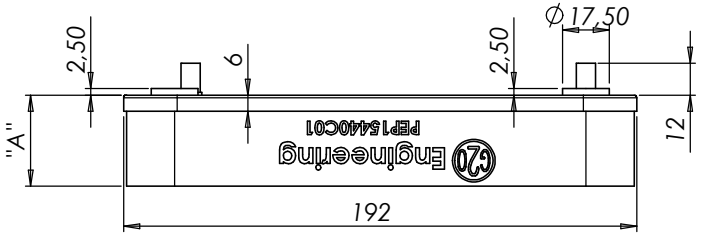

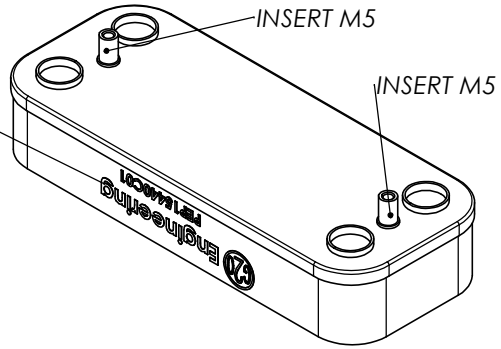

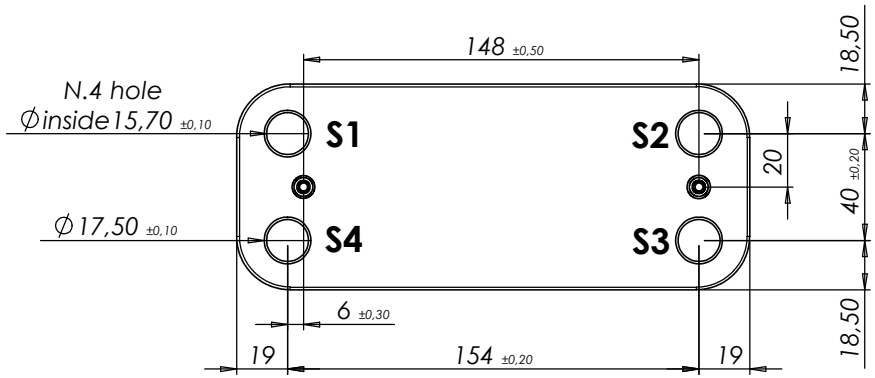

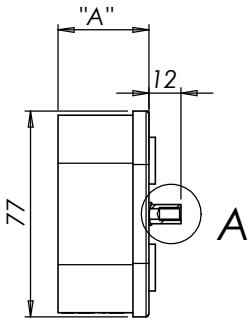

PEP15440C01-22304	22	56
PEP15440C01-20304	20	52
PEP15440C01-18304	18	47
PEP15440C01-16304	16	43
PEP15440C01-14304	14	38
PEP15440C01-12304	12	34
PEP15440C01-10304	10	29
CODE	PLATE	"A"

"A" = 2.24x N.P. +7mm

S1-S2 PRIMARY SIDE
S3-S4 SECONDARY SIDE

PLATE THICKNESS 0.30 AISI 304L

NOTE : Single packed with lable
Yes Logo G20

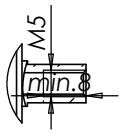

DETAIL A
DETAIL 1 : 1

UNLESS OTHERWISE SPECIFIED:
DIMENSIONS ARE IN MILLIMETERS
SURFACE FINISH:
TOLERANCES:
LINEAR:
ANGULAR:

FINISH:

DEBUR AND BREAK SHARP EDGES

DO NOT SCALE DRAWING

REVISION 1 by 22/10/10

G20 Engineering srl

	NAME	SIGNATURE	DATE
DRAWN			
CHK'D			
APPV'D			
MFG			
Q.A			

MATERIAL: AISI 304L

WEIGHT:

TITLE: PLATE HEAT EXCHANGER TYPE PEP-15440C01 INOX 304L

DWG NO. PEP-15440C01-304

A3

SCALE:1:2

SHEET 1 OF 1